FLORIDA BUILDING CODE
ENGINEERING EVALUATION REPORT

Date	2023-08-09
File No.	0064-30-2-5917
For	Westlake Davinci Roofscapes, LLC
Address	13890 W 101 St, Lenexa, KS 66215

Subject

Westlake Davinci Inspire Classic Roof Slates.

Evaluation Scope

This report is provided to assist registered design professionals and building officials in the United States for determining compliance to the performance objectives in the named building codes. The product(s) described herein have been evaluated to the 2023 Florida Building Code (FBC) and Residential Code (FBC-R).

CSI DIVISION: 07 00 00 THERMAL AND MOISTURE PROTECTION
SUBDIVISION: 07 32 26 Plastic Roof Tiles

FBC CATEGORY: Roofing
SUB-CATEGORY: Products Introduced as a Result of New Technology

CODE SECTIONS AND STANDARDS

FBC Section	Description	Referenced Standard or Code Section[1]	Year
1504.3	Wind Resistance of Nonballasted Roofs	Section 1609	2023
1504.3.1	Wind Uplift Resistance (Non-HVHZ)	UL 580	2006
1504.6[2]	Durability, Physical Properties	ASTM G155	2013
1505	Fire Classification (Non-HVHZ)	ASTM E108	2017
1515.1.3	Performance Requirements (HVHZ)	TAS 301	1994
1516.1	Fire Classification (HVHZ)	ASTM E108	2017
1523.1.1	Testing (HVHZ)	TAS 110	2000
1523.6.5	Discontinuous Roofing Systems, Wind-driven Rain (HVHZ)	TAS 100	2023
1523.6.5.2.4.1[2]	Wind Uplift Resistance (HVHZ)	TAS 125	2003
2606.4	Burning Rate	ASTM D635	2014
2606.4	Self-Ignition Temperature	ASTM D1929	2016
2606.4	Smoke Density Rating	ASTM D2843	2016
2615.2	Weathering (HVHZ)	ASTM G155	2013
2615.2	Tensile Strength after Weathering (HVHZ)	ASTM D638	2003
FBC-R Section	Description	Referenced Standard or Code Section[1]	Year
R902.1	Fire Classification	ASTM E108	2017
R904.3	Material Specifications and Physical Characteristics	-	2023

R905.1	Roof Covering Application	Table R301.2(2), R301.2(3)	2023
R4402.1	Roof Assemblies and Rooftop Structures (HVHZ)	FBC Ch 15	2023
R4412.1	Plastics (HVHZ)	FBC Ch 26	2023

1. Only the applicable reference standards and code sections sited in the main body text are listed. (-) indicates that the main body text covers the full explanation of the objective.
2. Code section citing related roof covering performance requirements and referenced test standard.

COMPLIANCE STATEMENT

It is the opinion of Boca Engineering Co. that Inspire Classic Roof Slates, when installed as described in this report, has demonstrated compliance with the listed sections of the 2023 Florida Building Code (FBC) and Residential Code (FBC-R), inclusive of the requirements for High Velocity Hurricane Zone (HVHZ), through testing in accordance with the listed standards. Design and performance information can be found in the Product Evaluation section this report.

This report has been prepared and reviewed on behalf of Boca Engineering Co. by:

Christopher Bowness, P.Eng., P.E.	2023-08-10 Issue Date	12-31-2026 Expiry Date

CHRISTOPHER W.C. BOWNESS
LICENSE
No 64748
STATE OF FLORIDA
PROFESSIONAL ENGINEER
FILE 0064

EVALUATION REPORT TERMS

1. This report is a general evaluation of the building code section requirements as identified and applies only to the samples that were evaluated. It does not imply any endorsement or warranty, nor that the signatory Engineer is the Designer of Record of any construction project for which the information is used.
   Rule 61G20-3 (17)(a) Definition: Evaluation report means a report based upon testing or comparative or rational analysis, or a combination thereof, from an approved product evaluation entity or a licensed Florida professional engineer or architect indicating that the product was evaluated to be in compliance with the Code or the intent of the Code and that the product complies with the Code or is, for the purpose intended, at least equivalent to that required by the Code.
2. This Evaluation Report expires Dec. 31, 2026, open to renewal. Up to the renewal date, the report is valid until such time as the named product(s) changes, the Quality Assurance Agency changes, or provisions of the Code that relate to the product change.

CERTIFICATION OF INDEPENDENCE

1. Boca Engineering Co., it's employees and shareholders, do not have, nor do they intend to or will acquire, a financial interest in any company manufacturing or distributing products that they evaluate.
2. Boca Engineering Co. is not owned, operated, or controlled by any company manufacturing or distributing products that they evaluate.

Contents

	pg.
Product Evaluation	3
Attachments	7
ATTACHMENT 1: MATERIAL PROPERTIES	7
ATTACHMENT 2: WIND PRESSURE AND WIND SPEED TABLES	8
ATTACHMENT 3: ASSEMBLY DIAGRAMS	13

Product Evaluation

1.0 PRODUCT DESCRIPTION

Inspire Classic Roof Slates are manufactured by injection molding a polymer blend into individual slate shingles. The shingle surface is textured with deckled edges to model natural slate and are available in 20 colors/color blends. An Inspire Classic roofing system will consist of the three basic pieces outlined below:

Starter Tile – Starter tiles are 1/4 x 12 x 13.5-in. and are installed on the outer most edge of the roof assembly.
Field Tile – Classic Slate pieces are 1/4 x 12 x 18-in. shingles and will make up much of the roof assembly. Field tiles can be installed with exposures ranging from 6 – 7.5-in.
Hip and Ridge – Hip and Ridge pieces are V-shaped and have a pre-formed pitch ranging from 3/12 to 18/12. Dimensionally they are 1/4-in. thick, 18 in. long and have 6 – 7.5-in. exposure.

1.1 MATERIAL PROPERTIES

The material properties can be found in ATTACHMENT 1: MATERIAL PROPERTIES.

2.0 INSTALLATION

The cladding systems as described in Section 1 shall be installed in accordance with the manufacturer's installation instructions, the 2023 Florida Building Code, and are subject to the Limitations stated within this report.

3.0 CODE SECTIONS REVIEW

FBC Section	Description
1504.3	**Wind Resistance of Nonballasted Roofs** Inspire Classic Slate roofing systems as covered in this report follow installation instructions in accordance with Section 1507 and resist design wind load pressures in accordance with Section 1609. See ATTACHMENT 2: WIND PRESSURE AND WIND SPEED TABLES, Tables 3 – 5 of this report.
1504.3.1	**Wind Uplift Resistance (Non-HVHZ)** Inspire Classic assemblies for non-HVHZ applications have been tested in accordance with UL580 to determine the allowable wind uplift pressure, applying a 2:1 margin of safety to tested results per Section 1504.9. See ATTACHMENT 2: WIND PRESSURE AND WIND SPEED TABLES, Tables 3 – 5 of this report.
1504.6	**Physical Properties, Durability** Inspire Classic products demonstrate physical integrity over the course of 4500 hours of exposure to accelerated weathering tests conducted in accordance with ASTM G155.
1505	**Fire Classification (Non-HVHZ)** See Section 5 of this report.
1515.1.3	**Performance Requirements (HVHZ)** Testing labs as listed in Section 9 of this report are considered to comply with TAS 301 via accreditation by nationally recognized agencies.

1516.1 **Fire Classification (HVHZ)**
All roofing assemblies in HVHZ applications require classification to ASTM E108 Class A, B, or C, depending on building occupancy class. Information on Inspire Classic Slate roofing classified assemblies is in Section 5 of this report.

1523.1.1 **Testing (HVHZ)**
Inspire Classic Slate roofing systems covered in this report for HVHZ applications have been tested in compliance with TAS 110.

1523.6.5 **Discontinuous Roofing Systems, Wind Driven Rain (HVHZ)**
Inspire Classic Slate roofing systems covered in this report for HVHZ applications have been tested in compliance with TAS 100 for wind-driven water infiltration resistance.

1523.6.5.2.4.1 **Wind Uplift Resistance (HVHZ)**
Inspire Classic Slate roofing systems covered in this report for HVHZ applications have been tested in accordance with TAS 125 to determine the allowable wind uplift pressure, applying a 2:1 margin of safety to tested results per Section 1523.4. See ATTACHMENT 2: WIND PRESSURE AND WIND SPEED TABLES, Tables 3 – 5 of this report.

2606.4 **Burning Rate**
Inspire Classic Slate roofing products covered in this report have been tested to ASTM D635 and qualify as Class CC2.

2606.4 **Self-Ignition Temperature**
Inspire Classic Slate roofing products covered in this report have been tested to ASTM D1929 and have self-ignition temperatures greater than 650°F.

2606.4 **Smoke Density**
Inspire Classic Slate roofing products covered in this report have been tested to ASTM D2843 and have a smoke density rating less than 75.

2615.2 **Weathering (HVHZ)**
Inspire Classic roofing products covered in this report have been tested to 4500 hours of accelerated xenon arc weathering exposure in compliance with ASTM G155.

2615.2 **Tensile Strength after Weathering (HVHZ)**
After 4500 hours of accelerated weathering exposure Inspire Classic roofing materials, tested to ASTM D638, loss of tensile strength yield does not exceed 10%.

FBC-R Section	Description

R902.1 **Fire Classification**
See Section 5 of this report.

R904.3 **Material Specifications and Physical Characteristics**
See ATTACHMENT 1: MATERIAL PROPERTIES, Table 1.

R905.1 **Roof Covering Application**
Allowable wind pressure values published in this report may be used with Tables R301.2(2) and R301.2(3) for roofs using an effective wind area of 10 square feet.

R4402.1 **Roof Assemblies and Rooftop Structures (HVHZ)**
Inspire Classic Slate roofing systems as covered in this report comply with HVHZ applications as prescribed in FBC Chapter 15.

R4412.1 **Plastics (HVHZ)**
Inspire Classic Slate roofing systems as covered in this report comply with HVHZ applications as prescribed in FBC Chapter 26.

4.0 LIMITATIONS:

1. This Evaluation is for the base code requirements of the building system as addressed in this report. In some building applications, additional performance objectives may be required by Code which must be addressed in the building design for those specific cases.
2. Design calculations, drawings, and special inspections are to be furnished for building projects by registered professionals as required by the respective jurisdictional authorities and Codes.
3. The installation details for each roof assembly evaluated for determining the maximum design wind uplift pressure are described in Tables 3 – 5 and are limited to those prescribed conditions.
4. Materials used as components in the roof assembly shall comply with the FBC, and where necessary possess the required product approval certification and labeling.
5. Roof slopes from 3:12 – 5:12 have a maximum exposure of 6-in. Roof slopes of 5:12 and above may have exposures ranging form 6 – 7.5-in.
6. Inspire Classic roofing products are for installation and fastening into wood-based solid sheathing, in accordance with this report.
7. Building framing and roof sheathing must be designed and installed in accordance with Code for capability of supporting the imposed loads, including but not limited to positive and negative wind loads.
8. The allowable negative wind pressures for roofing shown in Tables 3 – 5 must not exceed the design negative wind pressures determined in accordance with Chapter 16 of the FBC or Section R301.2.1.1 of the FBC-R.

5.0 FIRE CLASSIFICATION

Summary of fire performance classifications found by testing to code referenced standards:
ASTM D635: Burning Rate: 0.7 in/min, Class CC2
ASTM D1929: Self-Ignition Temperature: 785 ◦F
ASTM D2843: Smoke Density: 15.6%
Where roof assembly fire classification of ASTM E108 Class A, B, or C is required, Westlake DaVinci Inspire Classic Slates are listed by Intertek under Spec ID:69155 and shall be verified for each installation by the authority having jurisdiction.

6.0 QUALITY ASSURANCE ENTITY

The products evaluated in this report are surveyed at the approved manufacturing locations with third-party quality assurance inspections and product certification labeling by Intertek.

7.0 MANUFACTURING PLANTS

The manufacturing plants of roofing materials covered in this evaluation report are located in: Metamora, MI.

8.0 LABELING

Labeling shall be in accordance with the requirements of the FBC, and the Accredited Quality Assurance Agency.

9.0 REFERENCE TESTING AND EVALUATION DOCUMENTS

Entity	Entity Accreditation[1]	Standards	Report No.	Issue Date
PRI	IAS TL 189	ASTM D1929	MMLL-010-02-02	2018-03-20
PRI	IAS TL 189	ASTM D2843	MMLL-010-02-03	2018-05-18
PRI	IAS TL 189	ASTM D635	MMLL-010-02-03	2018-05-18
PRI	IAS TL 189	ASTM D638	MML-010-02-02	2018-11-05
Intertek	IAS TL 144	ASTM E108	m6381.03-121-24-r0	2021-10-12
PRI	IAS TL 189	ASTM G155	MML-010-02-02	2018-11-05
PRI	IAS TL 189	TAS 100	MMLL-011-02-02	2018-07-25
PRI	IAS TL 189	TAS 110	MML-010-02-02	2018-11-05
PRI	IAS TL 189	TAS 125	MMLL-011-02-01	2018-06-07
PRI	IAS TL 189	UL 580	MMLL-011-02-01	2018-05-14
Intertek	IAS TL 144	UL 580	e5935.01-109-44-r0	2015-05-05
Intertek	IAS AA-647	Quality Assurance	Spec ID: 73566	2023-07-28

1. Testing, certification, evaluation, and inspection agencies referenced have been verified to be accredited for the applicable scope and to be in good standing in accordance to Rule 61G20-3. All technical reference documents are current as of this date.

Attachments

ATTACHMENT 1: MATERIAL PROPERTIES

Table 1: Inspire Classic Roof Slates Material Properties

Property	Standard	Result	Requirement		Compliance
Fire/Flammability Material Properties[1]					
Spontaneous Ignition Temperature (◦F)	ASTM D1929	785 ◦F	≥	650	Pass
Linear Burn Rate (in/min)	ASTM D635	0.7 in/min	≤	2.5	Pass
Maximum Average Smoke Density (%)	ASTM D2843	15.6	≤	75	Pass
General Material Properties					
Tensile Strength (psi)	ASTM D638	1774 psi	Report Value		Pass
Tensile Strength after 4500-hrs of Accelerated Weathering (% of As Received)	ASTM D638 ASTM G155	100 %	≥	90[2]%	Pass
Roof Assembly Tests, Regional Codes[2]					
Florida High Velocity Hurricane Zone (HVHZ) Maximum Uplift Resistance (psf)	TAS 125	Uplift design pressure value (ASD) of 110 psf			
Florida High Velocity Hurricane Zone (HVHZ) Wind and Wind Driven Rain Resistance (mph)	TAS 100	No shingle displacement or water infiltration on airflow velocity from 35-110 mph, dependent on assembly details and installation conditions			
Roof Assembly Tests, Performance Values[2]					
Wind Uplift Resistance (psf)	UL 580	Allowable (ASD) values of 75 – 110 psf, dependent on assembly details and installation conditions			
Wind Speed Resistance (mph)	ASCE7-22	V_{ULT} 108 – 210 mph at heights of 15 – 60 ft, dependent on assembly details and installation conditions			
Fire Classification	ASTM E108	Class A, B, or C dependent on assembly details and installation conditions			

1. The requirements stated are as per the FBC.
2. Roof assembly tests results are dependent on installation components and environmental conditions consistent with tested details.

ATTACHMENT 2: WIND PRESSURE AND WIND SPEED TABLES

User's Guide to Inspire Classic Slate Wind Uplift Tables:

The Inspire Classic Slate wind uplift pressures and wind speed conversion tables have been developed to assist users in determining appropriate installation details for Inspire products, roof construction components, building dimension plans, and site and environmental conditions.

Wind speed conversion tables have been prepared following design methodology of ASCE7-22, Ch. 30.3, for low-rise enclosed buildings with maximum height of 60 ft, with topographic and elevation factors set to unity. These settings are typical of many installations, and consistent with the prescriptive approach used in FBC-R Table R301.2(2). All conditions and assembly details must be consistent with Tables 1 – 4 to be considered valid. If the actual site, building dimension or climatic conditions (including the given variables) differ from those prescribed, the allowable pressure values in Table 2 may be used to calculate adjusted wind speed limits.

For building heights over 60 ft, the Allowable Pressure (ASD) values listed in the wind uplift tables may be used by a licensed design professional to calculate ultimate wind speed and/or allowable height, for the given Inspire product installation detail and building project conditions.

At any building height, when the Allowable Pressure (ASD) has been pre-determined by the designer or building official, the user only needs to check that the installation detail is shown as capable of that pressure or greater.

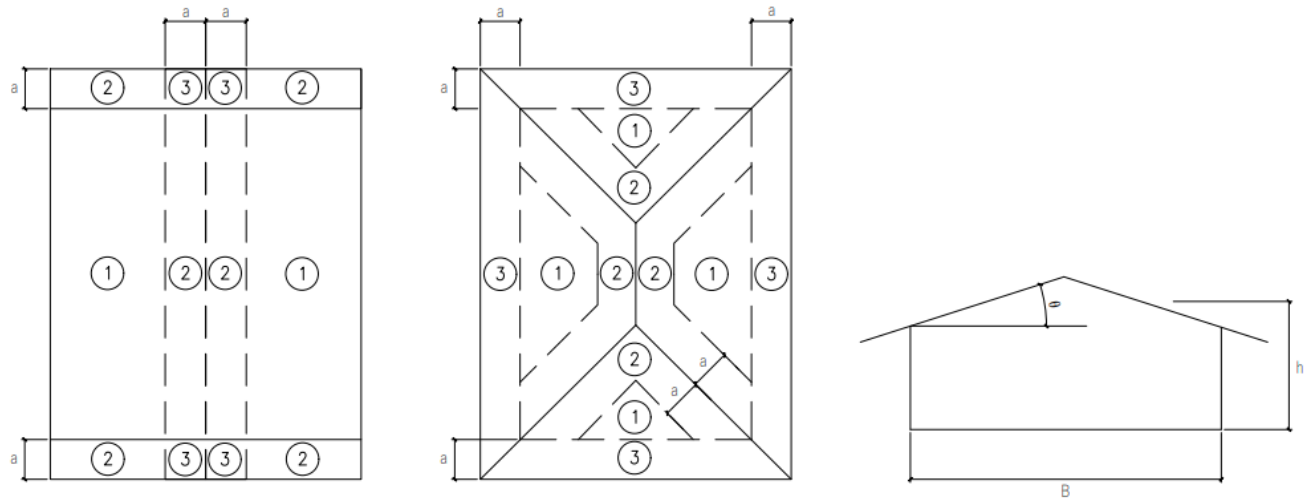

a = 10% of least horizontal dimension or 0.4*h*, whichever is smaller, but not less than either 4% of least horizontal dimension or 3 ft (0.9 m). If an overhang exists, the edge distance shall be measured from the outside edge of the overhang, The horizontal dimensions used to compute the edge distance shall not include any overhang distances.
h = Mean roof height, in ft (m), except that eave height shall be used for θ ≤ 10°.
B = Horizontal dimension of building measured normal to wind direction, in ft (m).
θ = Angle of plane of roof from horizontal, in degrees.

Figure 1: *Wind Pressure Diagrams as Represented in ASCE7-22 for use in conjunction with Tables 3 – 5.*

Table 2: General Attachment Component Details for Use with Tables 3 – 5[1]

EXPOSURE:	Specifies the exposure length of the shingle in inches as the maximum course-to-course spacing.
DECK SHEATHING:	Specifies the type and dimension of the required sheathing for shingle attachment.
SHINGLE FASTENER:	Specifies number and type of fasteners per individual shingle.
ALLOWABLE PRESSURE:	Maximum ASD design pressure in pounds-per-square-foot (psf) for wind uplift.
EXPOSURE CATEGORY:	Terrain wind exposure category defined in ASCE7-22, Section 26.7.
SLOPE RANGE:	Slope is shown in Vertical:Horizontal (e.g. 3:12 = 3-in. rise to 12-in. run).
MAXIMUM WIND SPEED V_{ult}:	Maximum wind velocity (mph) for the respective installation condition.
DECK ATTACHMENT:	In accordance with applicable Code, designed to support the maximum design pressure.
UNDERLAYMENT:	**Non-HVHZ**: Minimum underlayment shall be in accordance with FBC 1507.1.1 or any Approved underlayment having current Florida Statewide or Local Product Approval. **HVHZ**: One layer of ASTM D1970 self-adhering underlayment installed over one layer ASTM D226 Type II underlayment. In Class A fire classification applications, the underlayment specified in the manufacturer's fire classification listings must be used.
VALLEYS:	**Non-HVHZ:** In accordance with applicable Code and published manufacturer's instructions. **HVHZ:** A layer of ASTM D226 Type II underlayment extends 12-in. out from the valley centerline, followed by a second layer of ASTM D1970 installed with a 3-1/2-in lap. Capped with a sheet of 26ga and 25-1/2-in. wide valley metal installed with ring-shank roofing nails at 24-in. on center and 1-in. from exterior edges. Flashing joints lapped 2-in. with ASTM D1970 sheet wrapped over drip edge.
SHINGLE FASTENING:	Minimum 11 gage (0.12-in.), galvanized or stainless-steel annular ring shank nails having not less than 20 rings per inch, heads not less than 3/8-in. (9.5-mm) in diameter; and lengths sufficient to penetrate through the thickness of plywood panel or wood plank decking not less than 3/16-in. (4.8-mm), or to penetrate into a 1-in. (25-mm) or greater thickness of lumber not less than 1-in. All nails shall comply with ASTM F1667, and in HVHZ applications must be listed by a certification agency to the applicable Code.

1. HVHZ assemblies may also be used in non-HVHZ regions following the same details.

Table 3: Allowable Wind Uplift Pressure Values for Inspire Classic Slate Roofing Assemblies.

System No.	Deck Sheathing[1,2]	Maximum Shingle Exposure (in)	Shingle Fastener[5]	No. of Fasteners	Allowable Pressure (ASD) (psf)[3,4]
Non-HVHZ Assemblies					
1	7/16-in. OSB	7.5[6]	1-1/2-in. by 1/8-in. diameter (11 ga) ring-shank stainless steel roofing nails with 3/8-in. nominal diameter heads	2	75
2	15/32-in. Plywood	6	1-1/2-in. by 1/8-in. diameter (11 ga) ring-shank stainless steel roofing nails with 3/8-in. nominal diameter heads	2	110
HVHZ Assemblies					
3	15/32-in. Plywood	6	1-1/2-in. by 1/8-in. diameter (11 ga) ring-shank stainless steel roofing nails with 3/8-in. nominal diameter heads	2	110

1. Plywood Sheathing: Min. 0.42 SG, Exposure 1, complying with NIST DOC PS 2. Wood sheathing may be substituted with thicker profile of up to nominal 1-in.
2. OSB Sheathing: Exposure 1, complying with NIST DOC PS 2. Wood sheathing may be substituted with thicker profile of up to nominal 1-inch.
3. To convert to Factored Design Resistance Pressure (psf) (LRFD), multiply Allowable Pressure (psf) (ASD) by 1.67.
4. Allowable Pressure (psf) (ASD) represents tested assembly ultimate pressure divided by safety factor of 2.
5. All fasteners are to be corrosion resistant. Nails must comply with ASTM F1667 with minimum head diameter of 3/8-inch.
6. Exposure maximum reduced to 6-inches on roof slopes less than 5:12.

Table 4: Maximum Wind Speeds of Roof Cladding at Various Building Heights[1,2] – 2023 FBC (Non-HVHZ)

GABLE ROOFS (SLOPE 3:12 - 4.4:12)																	
System No.[5]	Allowable Pressure (psf) (ASD)[3,4]	Exposure Category[6]	ZONE 2/3, (EDGE/CORNER)[7] Maximum Wind Speed V_{ult} (mph) Building Height (ft)[8,9]							ZONE 1 (FIELD)[7] Maximum Wind Speed V_{ult} (mph) Building Height (ft)[8,9]						
			15	20	25	30	40	50	60	15	20	25	30	40	50	60
1	75	B	163	157	152	147	143	139	135	210	206	200	194	189	183	178
		C	134	130	127	125	121	118	116	176	171	167	164	159	155	153
		D	121	119	116	114	112	109	108	160	156	153	151	147	144	142
2	110	B	198	190	184	178	174	168	164	210	210	210	210	210	210	210
		C	162	157	154	151	146	143	140	210	207	203	199	193	188	185
		D	147	144	141	139	135	132	130	194	189	186	183	178	174	172

GABLE ROOFS (SLOPE 4.5:12 – 6.1:12)																	
System No.[5]	Allowable Pressure (psf) (ASD)[3,4]	Exposure Category[6]	ZONE 2/3, (EDGE/CORNER)[7] Maximum Wind Speed V_{ult} (mph) Building Height (ft)[8,9]							ZONE 1 (FIELD)[7] Maximum Wind Speed V_{ult} (mph) Building Height (ft)[8,9]						
			15	20	25	30	40	50	60	15	20	25	30	40	50	60
1	75	B	186	179	173	168	163	158	154	210	210	210	210	210	208	203
		C	153	148	145	142	138	135	132	201	195	191	187	181	177	174
		D	139	135	133	131	127	125	123	182	178	175	172	167	164	162
2	110	B	210	210	210	204	198	192	187	210	210	210	210	210	210	210
		C	185	180	176	172	167	163	160	210	210	210	210	210	210	210
		D	168	164	161	158	154	151	149	210	210	210	208	203	199	196

GABLE ROOFS (SLOPE 6.2:12 – 12:12)																	
System No.[5]	Allowable Pressure (psf) (ASD)[3,4]	Exposure Category[6]	ZONE 2/3, (EDGE/CORNER)[7] Maximum Wind Speed V_{ult} (mph) Building Height (ft)[8,9]							ZONE 1 (FIELD)[7] Maximum Wind Speed V_{ult} (mph) Building Height (ft)[8,9]						
			15	20	25	30	40	50	60	15	20	25	30	40	50	60
1	75	B	194	186	180	175	170	165	161	210	210	210	204	198	192	187
		C	159	154	151	148	144	140	138	185	180	176	172	167	163	160
		D	144	141	138	136	133	130	128	168	164	161	158	154	151	149
2	110	B	210	210	210	210	206	199	195	210	210	210	210	210	210	210
		C	192	187	183	179	174	170	167	210	210	210	208	202	198	194
		D	175	171	168	165	161	157	155	203	198	195	192	187	183	180

Continued on next page.

Table 4 Continued: Maximum Wind Speeds of Roof Cladding at Various Building Heights[1,2] – 2023 FBC (Non-HVHZ)

HIP ROOFS (SLOPE 3:12 – 4.4:12)																	
System No.[5]	Allowable Pressure (psf) (ASD)[3,4]	Exposure Category[6]	ZONE 2/3, (EDGE/CORNER)[7] Maximum Wind Speed V_{ult} (mph) Building Height (ft)[8,9]							ZONE 1 (FIELD)[7] Maximum Wind Speed V_{ult} (mph) Building Height (ft)[8,9]						
			15	20	25	30	40	50	60	15	20	25	30	40	50	60
1	75	B	190	183	177	172	167	162	158	210	210	210	204	198	192	187
		C	156	152	148	145	141	138	135	185	180	176	172	167	163	160
		D	142	138	136	133	130	128	126	168	164	161	158	154	151	149
2	110	B	210	210	210	208	202	196	191	210	210	210	210	210	210	210
		C	189	184	180	176	171	167	164	210	210	210	208	202	198	194
		D	172	168	164	162	158	154	152	203	198	195	192	187	183	180

HIP ROOFS (SLOPE 4.5:12 – 6.1:12)																	
System No.[5]	Allowable Pressure (psf) (ASD)[3,4]	Exposure Category[6]	ZONE 2/3, (EDGE/CORNER)[7] Maximum Wind Speed V_{ult} (mph) Building Height (ft)[8,9]							ZONE 1 (FIELD)[7] Maximum Wind Speed V_{ult} (mph) Building Height (ft)[8,9]						
			15	20	25	30	40	50	60	15	20	25	30	40	50	60
1	75	B	210	206	200	194	189	183	178	210	210	210	210	210	210	209
		C	176	171	167	164	159	155	153	207	201	197	193	187	183	179
		D	160	156	153	151	147	144	142	188	183	180	177	173	169	167
2	110	B	210	210	210	210	210	210	210	210	210	210	210	210	210	210
		C	210	207	203	199	193	188	185	210	210	210	210	210	210	210
		D	194	189	186	183	178	174	172	210	210	210	210	209	205	202

HIP ROOFS (SLOPE 6.2:12 – 12:12)																	
System No.[5]	Allowable Pressure (psf) (ASD)[3,4]	Exposure Category[6]	ZONE 2/3, (EDGE/CORNER)[7] Maximum Wind Speed V_{ult} (mph) Building Height (ft)[8,9]							ZONE 1 (FIELD)[7] Maximum Wind Speed V_{ult} (mph) Building Height (ft)[8,9]						
			15	20	25	30	40	50	60	15	20	25	30	40	50	60
1	75	B	196	188	182	177	172	166	162	210	210	210	210	210	208	203
		C	160	156	152	149	145	142	139	201	195	191	187	181	177	174
		D	146	142	140	137	134	131	129	182	178	175	172	167	164	162
2	110	B	210	210	210	210	208	201	196	210	210	210	210	210	210	210
		C	194	189	185	181	176	171	168	210	210	210	210	210	210	210
		D	176	172	169	166	162	159	156	210	210	210	208	203	199	196

1. Table limiting heights and wind velocity values are for low-rise buildings of maximum 60 ft height, developed in accordance with ASCE7-16, Table 30.3-1. Design input values: GC_p = ASCE7-22 Figs 30.3-2(A-I), GC_{pi} = 0.18, K_{zt} = 1, K_d = 0.85, K_e = 1, I_w = 1.0.
2. Wind speed conversion corresponds to the maximum Zone 2/3 or Zone 1 pressure with effective area of 10 ft^2. Table wind speeds are only valid under the design conditions stated. For other site conditions and/or building dimensions, designers can use the published Allowable Pressure (psf) (ASD) to determine wind speeds with FBC-R Table R301.2(2) or calculations to FBC Ch 16.
3. To convert to Factored Design Resistance Pressure (psf) (LRFD), multiply Allowable Pressure (psf) (ASD) by 1.67.
4. Allowable Pressure (psf) (ASD) represents tested assembly ultimate pressure divided by safety factor of 2.
5. Inspire Classic Slate System No. details as provided in Table 2 of this report.
6. Wind exposure categories as defined in ASCE7-22, Section 26.7.
7. Per figure 1 of this report, Zone 2/3 is the perimeter and corner locations and Zone 1 is the field of the roof. The zone numbers have been simplified for use with this table.
8. Interpolation not permitted. For heights in between those listed, use next highest height column.
9. NA indicates that the installation condition is not acceptable within the design limits of the table.

Table 5: Maximum Wind Speeds of Roof Cladding at Various Building Heights[1,2] – 2023 FBC (HVHZ)

GABLE ROOFS (SLOPE 3:12 – 4.4:12)																	
System No.[5]	Allowable Pressure (psf) (ASD)[3,4]	Exposure Category[6]	ZONE 2/3, (EDGE/CORNER)[7] Maximum Wind Speed V_{ult} (mph) Building Height (ft)[8,9]							ZONE 1 (FIELD)[7] Maximum Wind Speed V_{ult} (mph) Building Height (ft)[8,9]						
			15	20	25	30	40	50	60	15	20	25	30	40	50	60
3	110	C	162	157	NA	NA	NA	NA	NA	210	207	203	199	193	188	185
		D	NA	NA	NA	NA	NA	NA	NA	194	189	186	183	178	174	172

GABLE ROOFS (SLOPE 4.5:12 – 6.1:12)																	
System No.[5]	Allowable Pressure (psf) (ASD)[3,4]	Exposure Category[6]	ZONE 2/3, (EDGE/CORNER)[7] Maximum Wind Speed V_{ult} (mph) Building Height (ft)[8,9]							ZONE 1 (FIELD)[7] Maximum Wind Speed V_{ult} (mph) Building Height (ft)[8,9]						
			15	20	25	30	40	50	60	15	20	25	30	40	50	60
3	110	C	185	180	176	172	167	163	160	210	210	210	210	210	210	210
		D	168	164	161	158	NA	NA	NA	210	210	210	208	203	199	196

GABLE ROOFS (SLOPE 6.2:12 – 12:12)																	
System No.[5]	Allowable Pressure (psf) (ASD)[3,4]	Exposure Category[6]	ZONE 2/3, (EDGE/CORNER)[7] Maximum Wind Speed V_{ult} (mph) Building Height (ft)[8,9]							ZONE 1 (FIELD)[7] Maximum Wind Speed V_{ult} (mph) Building Height (ft)[8,9]						
			15	20	25	30	40	50	60	15	20	25	30	40	50	60
3	110	C	192	187	183	179	174	170	167	210	210	210	208	202	198	194
		D	175	171	168	165	161	157	NA	203	198	195	192	187	183	180

HIP ROOFS (SLOPE 3:12 – 4.4:12)																	
System No.[5]	Allowable Pressure (psf) (ASD)[3,4]	Exposure Category[6]	ZONE 2/3, (EDGE/CORNER)[7] Maximum Wind Speed V_{ult} (mph) Building Height (ft)[8,9]							ZONE 1 (FIELD)[7] Maximum Wind Speed V_{ult} (mph) Building Height (ft)[8,9]						
			15	20	25	30	40	50	60	15	20	25	30	40	50	60
3	110	C	189	184	180	176	171	167	164	210	210	210	208	202	198	194
		D	172	168	164	162	158	NA	NA	203	198	195	192	187	183	180

HIP ROOFS (SLOPE 4.5:12 – 6.1:12)																	
System No.[5]	Allowable Pressure (psf) (ASD)[3,4]	Exposure Category[6]	ZONE 2/3, (EDGE/CORNER)[7] Maximum Wind Speed V_{ult} (mph) Building Height (ft)[8,9]							ZONE 1 (FIELD)[7] Maximum Wind Speed V_{ult} (mph) Building Height (ft)[8,9]						
			15	20	25	30	40	50	60	15	20	25	30	40	50	60
3	110	C	210	207	203	199	193	188	185	210	210	210	210	210	210	210
		D	194	189	186	183	178	174	172	210	210	210	210	209	205	202

HIP ROOFS (SLOPE 6.2:12 – 12:12)																	
System No.[5]	Allowable Pressure (psf) (ASD)[3,4]	Exposure Category[6]	ZONE 2/3, (EDGE/CORNER)[7] Maximum Wind Speed V_{ult} (mph) Building Height (ft)[8,9]							ZONE 1 (FIELD)[7] Maximum Wind Speed V_{ult} (mph) Building Height (ft)[8,9]						
			15	20	25	30	40	50	60	15	20	25	30	40	50	60
3	110	C	194	189	185	181	176	171	168	210	210	210	210	210	210	210
		D	176	172	169	166	162	159	156	210	210	210	208	203	199	196

1,2,3,4,5,6,7,8,9. See notes for Table 4, same notes apply to this table.

ATTACHMENT 3: ASSEMBLY DIAGRAMS

Begins next page.

INSPIRE CLASSIC SLATE ROOFING
DETAILS OF 2023 FBC WIND LOAD RESISTANCE ASSEMBLIES

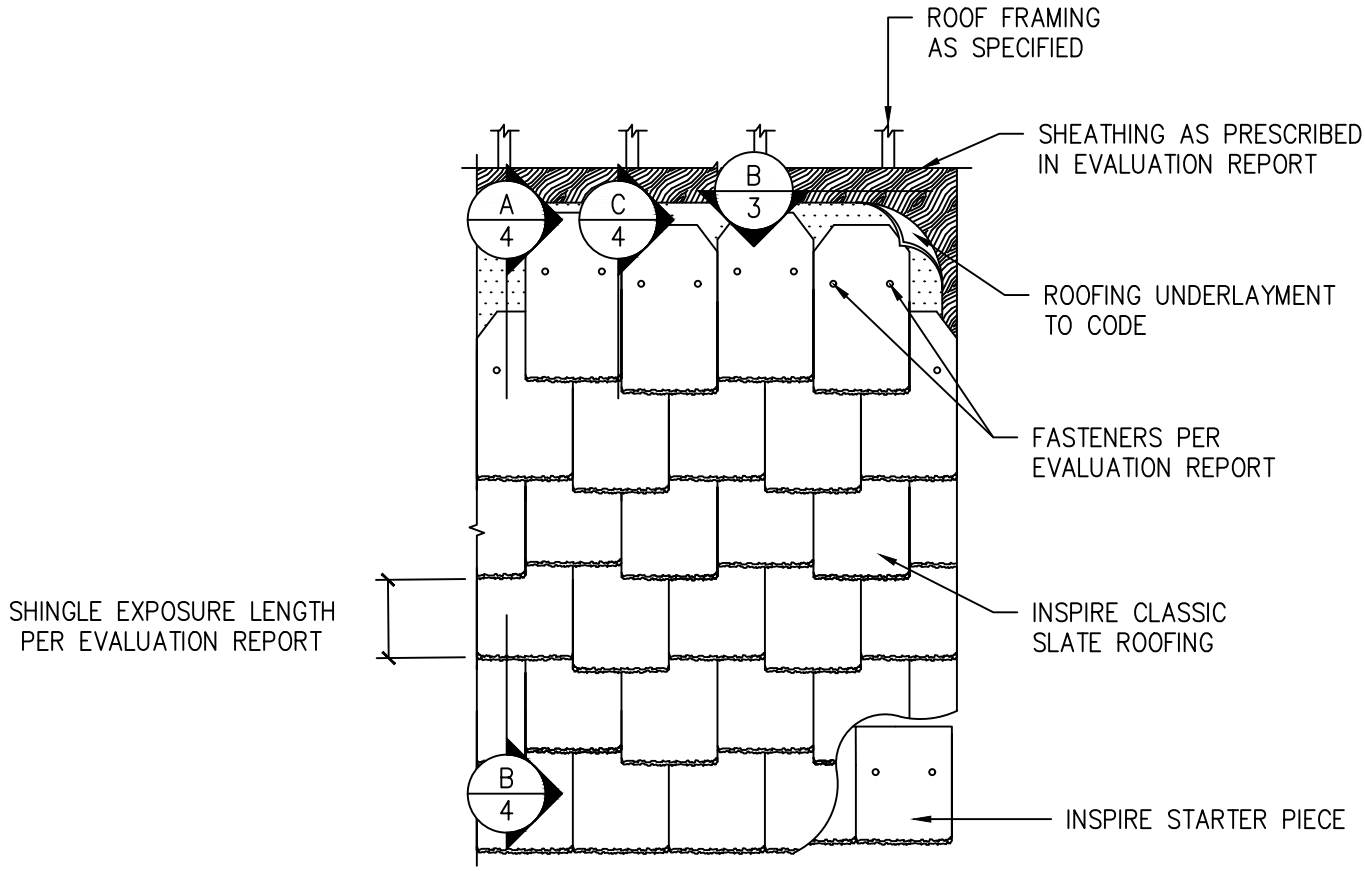

A/1 INSPIRE CLASSIC SLATE ROOFING INSTALLATION

PLAN VIEW NOT-TO-SCALE

NOTES:

1. FLASHING TO CODE (NOT SHOWN) AT ALL PENETRATIONS

DRAWING FOR DAVINCI SIDING ENGINEERING EVALUATION REPORT – NOT FOR USE AS CONSTRUCTION DESIGN DOCUMENTS

COPYRIGHT © 2023 RESERVED. THESE PLANS AND DESIGNS ARE AT ALL TIMES THE PROPERTY OF BOCA ENGINEERING TO BE USED FOR THE PROJECT SHOWN. WRITTEN CONSENT IS REQUIRED FROM THE ENGINEER BEFORE ANY REPRODUCTION.

REV	DATE	ISSUE	APP
0	2023/08/09	FOR PUBLICATION	CB

CLIENT:	PROJECT:	TITLE:	DRAWING NO.	DES
WESTLAKE DAVINCI ROOFSCAPES, LLC	INSPIRE CLASSIC SLATE ROOFING	GENERAL INSTALLATION DETAILS	0064-30-2	CB
			DATE: AUGUST 9, 2023	DRN: NN
				CHK: CB

INSPIRE CLASSIC SLATE ROOFING
DETAILS OF 2023 FBC WIND LOAD RESISTANCE ASSEMBLIES

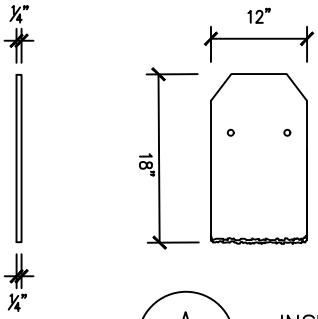

PROPERTY	INSPIRE CLASSIC SLATE
LENGTH	18"
WIDTH	12"
THICKNESS	HEAD END = ¼" BUTT END = ¼"

A/2 INSPIRE CLASSIC SLATE ROOFING
ELEVATION VIEW NOT–TO–SCALE

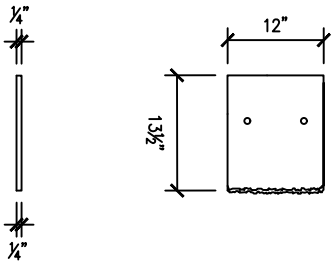

PROPERTY	INSPIRE STARTER PIECE
LENGTH	13½"
WIDTH	12"
THICKNESS	HEAD END = ¼" BUTT END = ¼"

B/2 INSPIRE STARTER PIECE
ELEVATION NOT–TO–SCALE

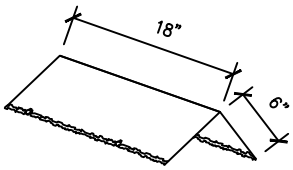

PROPERTY	INSPIRE HIP AND RIDGE
LENGTH	18"
HEIGHT	6"

C/2 INSPIRE HIP AND RIDGE
ELEVATION NOT–TO–SCALE

DRAWING FOR DAVINCI SIDING ENGINEERING EVALUATION REPORT – NOT FOR USE AS CONSTRUCTION DESIGN DOCUMENTS

COPYRIGHT © 2023 RESERVED. THESE PLANS AND DESIGNS ARE AT ALL TIMES THE PROPERTY OF BOCA ENGINEERING TO BE USED FOR THE PROJECT SHOWN. WRITTEN CONSENT IS REQUIRED FROM THE ENGINEER BEFORE ANY REPRODUCTION.

REV	DATE	ISSUE	APP
0	2023/08/09	FOR PUBLICATION	CB

CLIENT:	PROJECT:	TITLE:	DRAWING NO.	DES
WESTLAKE DAVINCI ROOFSCAPES, LLC	INSPIRE CLASSIC SLATE ROOFING	GENERAL INSTALLATION DETAILS	0064–30–2	CB
			DATE: AUGUST 9, 2023	DRN: NN
				CHK: CB

INSPIRE CLASSIC SLATE ROOFING
DETAILS OF 2023 FBC WIND LOAD RESISTANCE ASSEMBLIES

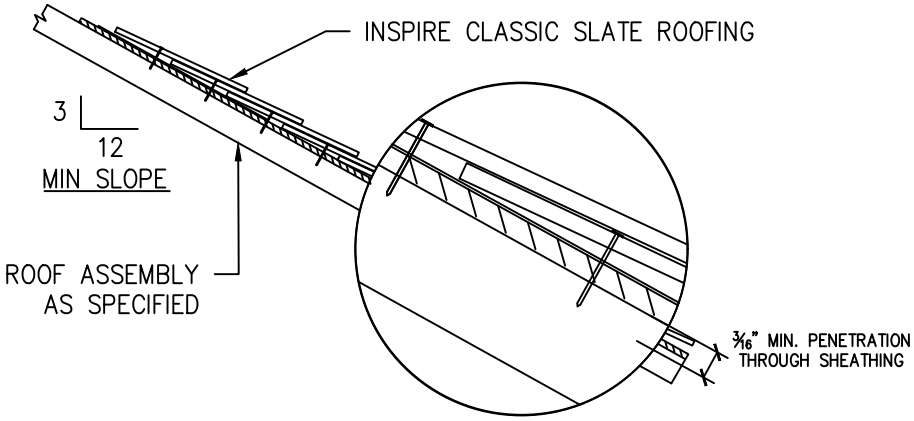

A/3 INSPIRE CLASSIC SLATE ROOFING INSTALLATION

SECTION VIEW NOT-TO-SCALE

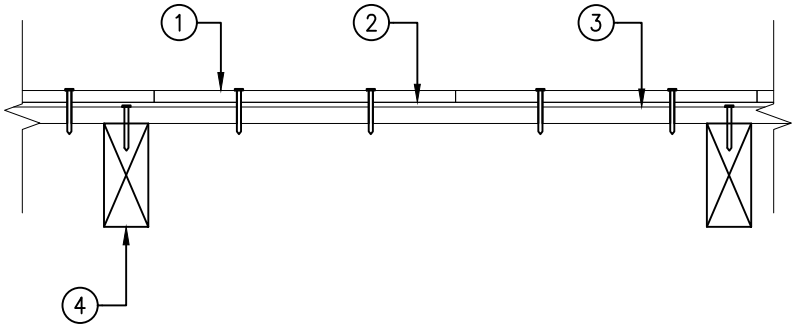

B/3 INSPIRE CLASSIC SLATE ON PLYWOOD SHEATHING

SECTION VIEW NOT-TO-SCALE

ROOF FRAMING & WOOD-BASE SHEATHING ASSEMBLY EXTERIOR TO INTERIOR	
1	INSPIRE CLASSIC SLATE FASTENING PER TABLE 3 OF INSPIRE WIND PRESSURE USER'S GUIDE AND WIND SPEED TABLES
2	ROOFING UNDERLAYMENT PER TABLE 3 OF INSPIRE WIND PRESSURE USER'S GUIDE AND WIND SPEED TABLES
3	WOOD-BASED SHEATHING FASTENED TO FRAMING PER CODE, SEE TABLE 3 OF INSPIRE WIND PRESSURE USER'S GUIDE AND WIND SPEED TABLES FOR ACCEPTABLE ASSEMBLY DETAILS
4	ROOF FRAMING PER PLANS, TO CODE

DRAWING FOR DAVINCI SIDING ENGINEERING EVALUATION REPORT – NOT FOR USE AS CONSTRUCTION DESIGN DOCUMENTS

COPYRIGHT © 2023 RESERVED. THESE PLANS AND DESIGNS ARE AT ALL TIMES THE PROPERTY OF BOCA ENGINEERING TO BE USED FOR THE PROJECT SHOWN. WRITTEN CONSENT IS REQUIRED FROM THE ENGINEER BEFORE ANY REPRODUCTION.

REV	DATE	ISSUE	APP
0	2023/08/09	FOR PUBLICATION	CB

CLIENT:	PROJECT:	TITLE:	DRAWING NO.	DES
WESTLAKE DAVINCI ROOFSCAPES, LLC	INSPIRE CLASSIC SLATE ROOFING	GENERAL INSTALLATION DETAILS	0064-30-2	CB
			DATE: AUGUST 9, 2023	DRN: NN
				CHK: CB

INSPIRE CLASSIC SLATE ROOFING
SIDING OPENINGS AND END OF WALL DETAILS

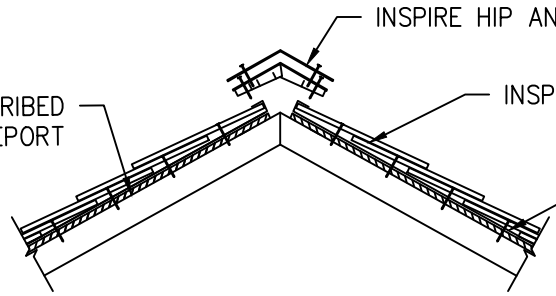

A/4 INSPIRE CLASSIC SLATE HIP AND RIDGE DETAIL
SECTION VIEW NOT-TO-SCALE

NOTES:
1. FLASHING TO CODE (NOT SHOWN) AT ALL PENETRATIONS
2. SEE NOTES PAGE FOR INFORMATION ON HIP AND RIDGE AND VALLEY DETAILS.

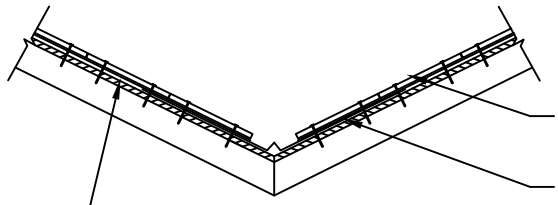

B/4 INSPIRE CLASSIC SLATE VALLEY DETAIL
SECTION VIEW NOT-TO-SCALE

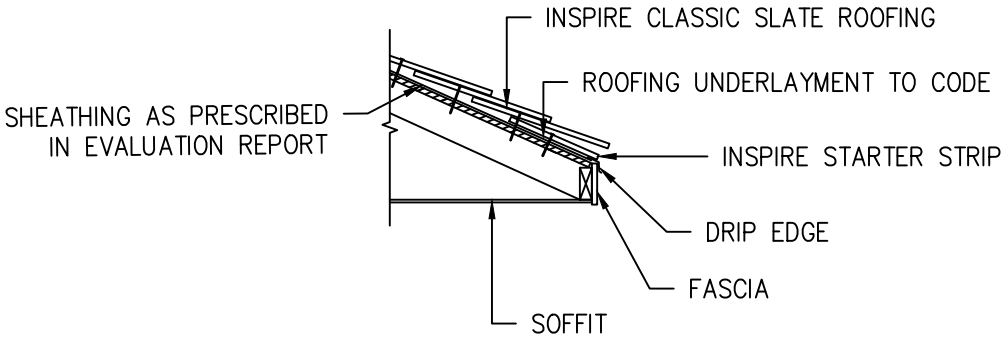

C/4 INSPIRE CLASSIC SLATE EAVE DETAIL
SECTION VIEW NOT-TO-SCALE

DRAWING FOR DAVINCI SIDING ENGINEERING EVALUATION REPORT – NOT FOR USE AS CONSTRUCTION DESIGN DOCUMENTS

COPYRIGHT © 2023 RESERVED. THESE PLANS AND DESIGNS ARE AT ALL TIMES THE PROPERTY OF BOCA ENGINEERING TO BE USED FOR THE PROJECT SHOWN. WRITTEN CONSENT IS REQUIRED FROM THE ENGINEER BEFORE ANY REPRODUCTION.

REV	DATE	ISSUE	APP
0	2023/08/09	FOR PUBLICATION	CB

CLIENT:	PROJECT:	TITLE:	DRAWING NO.	DES
WESTLAKE DAVINCI ROOFSCAPES, LLC	INSPIRE CLASSIC SLATE ROOFING	GENERAL INSTALLATION DETAILS	0064-30-2	CB
			DATE: AUGUST 9, 2023	DRN: NN
				CHK: CB

INSPIRE CLASSIC SLATE ROOFING
SIDING OPENINGS AND END OF WALL DETAILS

LEGEND AND SYMBOLS

A / 1 — DETAIL NUMBER — SHEET DRAWN

A / 1 — SECTION NUMBER — SHEET DRAWN

TESTING AND CODE COMPLIANCE

1. THE SIDING PRODUCT ASSEMBLY SHOWN IS DESIGNED TO COMPLY WITH THE 8TH EDITION (2023) FLORIDA BUILDING CODE (FBC).
2. THE STRUCTURAL FRAMING AND SHEATHING SHALL BE DESIGNED AND ANCHORED TO PROVIDE LATERAL BRACING TO NOT EXCEED DEFLECTION LIMITS, AND PROPERLY TRANSFER ALL LOADS TO THE STRUCTURE. FRAMING DESIGN AND INSTALLATION IS THE RESPONSIBILITY OF THE ENGINEER OR ARCHITECT OF RECORD FOR THE PROJECT OF INSTALLATION.
3. THESE DRAWINGS APPLY TO THE TESTING ASSEMBLY ONLY AND DO NOT IMPLY THAT THE SIGNATORY ENGINEER IS THE DESIGNER OF RECORD FOR ANY FUTURE CONSTRUCTION ON WHICH THEY ARE USED.
4. SOME NON-STRUCTURAL COMPONENTS NOT SHOWN AND DO NOT IMPACT STRENGTH FOR ATTACHMENT. TO BE INSTALLED PER CODE AND MAY INCLUDE: FLASHING, INTERIOR INSULATION, INTERIOR FINISH.

INSTALLATION

THE INSTALLATION DETAILS DESCRIBED ARE OF THE LABORATORY TESTED ASSEMBLY AND MAY NOT REFLECT ACTUAL CONDITIONS FOR A SPECIFIC SITE. IF SITE CONDITIONS DEVIATE FROM THE REQUIREMENTS DETAILED HEREIN, THE LICENSED ENGINEER OR ARCHITECT PREPARED SITE-SPECIFIC DOCUMENTS SHALL BE USED.

SHEATHING

1. WOOD-BASED STRUCTURAL SHEATHING:
   - 1.1. PLYWOOD – US DOC PS1-19 OR PS2-18 U.N.O.
   - 1.2. OSB – US DOC PS2-18 U.N.O.

FASTENERS

1. NAILS TO CONFORM TO ASTM F1667.
2. ALL FASTENERS WITH CORROSION-RESISTANT GALVANIZED COATING.

HIP & RIDGE

INSPIRE CLASSIC SLATE ONE-PIECE HIP AND RIDGE TILES ARE INSTALLED AT A 6 TO 7.5-INCH (152 TO 191-mm) EXPOSURE. EACH TILE WILL BE FASTENED WITH (2) NAILS LOCATED IN THE DESIGNATED NAIL TARGET AREAS. HIP AND RIDGE TILES MUST BE SECURED WITH THE SAME TYPE AND NUMBER OF FASTENERS AS THE FIELD TILES.

VALLEYS

NON-HVHZ: IN ACCORDANCE WITH APPLICABLE CODE AND PUBLISHED MANUFACTURER'S INSTRUCTIONS.

HVHZ: A LAYER OF ASTM D226 TYPE II UNDERLAYMENT EXTENDS 12 IN. OUT FROM THE VALLEY CENTERLINE, FOLLOWED BY A SECOND LAYER OF ASTM D1970 SELF-ADHERING UNDERLAYMENT INSTALLED WITH A 3-1/2-IN. LAP. CAPPED WITH A SHEET OF 26GA AND 25-1/2-IN. WIDE VALLEY METAL INSTALLED WITH RING-SHANK ROOFING NAILS AT 24-IN. ON CENTER AND 1-IN. FROM EXTERIOR EDGES. FLASHING JOINTS LAPPED 2-IN. WITH SELF-ADHERING UNDERLAYMENT.

DRAWING FOR DAVINCI SIDING ENGINEERING EVALUATION REPORT – NOT FOR USE AS CONSTRUCTION DESIGN DOCUMENTS

COPYRIGHT © 2023 RESERVED. THESE PLANS AND DESIGNS ARE AT ALL TIMES THE PROPERTY OF BOCA ENGINEERING TO BE USED FOR THE PROJECT SHOWN. WRITTEN CONSENT IS REQUIRED FROM THE ENGINEER BEFORE ANY REPRODUCTION.

REV	DATE	ISSUE	APP
0	2023/08/09	FOR PUBLICATION	CB

CLIENT:	PROJECT:	TITLE:	DRAWING NO.	DES
WESTLAKE DAVINCI ROOFSCAPES, LLC	INSPIRE CLASSIC SLATE ROOFING	GENERAL INSTALLATION DETAILS	0064-30-2	CB
			DATE: AUGUST 9, 2023	DRN: NN
				CHK: CB